CANUSA-CPS

A SHAWCOR COMPANY

Product Data Sheet

Aqua-Shield™ AQW-FF

Corrosion protection sleeves for factory fittings of water pipelines

Canusa-CPS is a leading manufacturer of specialty pipeline coatings which, for over 30 years, have been used for sealing and corrosion protection of pipeline joints and other substrates. Canusa high performance products are manufactured to the highest quality standards and are available in a number of configurations to accommodate your specific project applications.

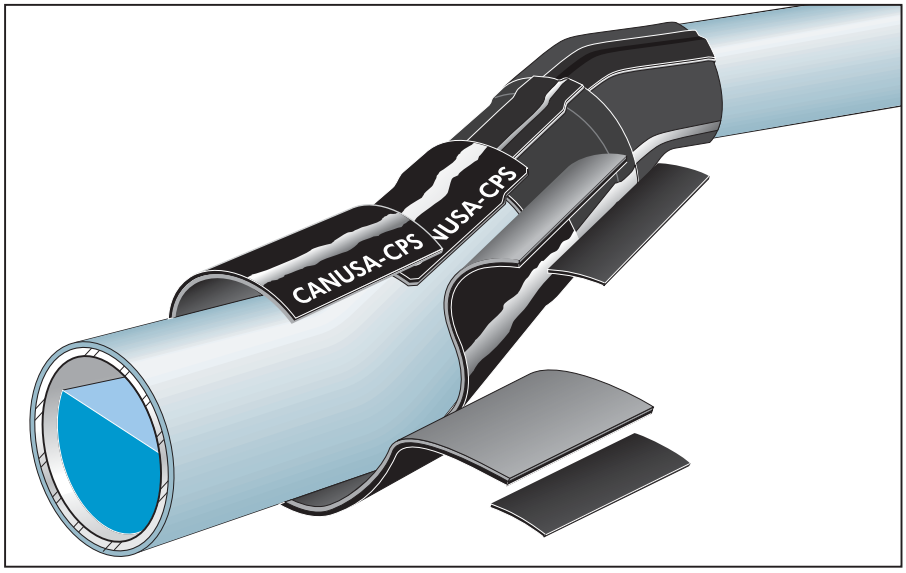

Product Description

Aqua-Shield™ is a family of heat-shrinkable sleeve products that have been specifically designed for the corrosion protection of water pipelines. Various product configurations are available that utilize a crosslinked polyolefin backing, coated with a protective, heat-activated adhesive which effectively bonds to metallic substrates and common pipeline coatings.

Aqua-Shield™ AQW-FF is a two-piece, heat-shrinkable, sleeve designed specifically for coating factory-fabricated fittings, service outlets and mitered elbows.

Features & Benefits

Handling & Long Term Sealing

Once installed, the Canusa AQW-FF exhibits excellent mechanical and shear-resistant properties, withstanding damage commonly associated with added handling in the shop and at the project site. Canusa AQW-FF also utilizes unique product properties that provide resistance to UV-related damage as well as maintaining a positive seal to the substrate even during fluctuating ambient temperature cycles that can be experienced prior to burial.

Flexibility on the Job Site

Since Aqua-Shield™ AQW-FF is supplied in bulk rolls, just-in-time customized lengths can be easily cut in the shop or field for any pipe size. This flexibility results in reduced inventories and cost savings.

Aqua-Shield ™ AQW-FF is also available in pre-cut, customer ordered lengths for large project requirements.

Easy Field Installation

Aqua-Shield™ AQW-FF can be installed quickly and easily in most environments. Since no special taping, priming or operator equipment is required, product installation is quick and labour costs are kept to a minimum.

Assured Performance

All Aqua-Shield™ products meet or exceed the requirements of AWWA standard C216-00.

Applications

- Water Pipelines
- Large Diameter
- Fittings & Bends
- Field Joints

Configurations

- Aqua-Shield™ AQW - Cut
- Aqua-Shield™ AQW - Bulk
- Standard Shrink

Pipe Sizes

- All Sizes

Approvals

- AWWA C216-00

Aqua-Shield™ AQW-FF

Typical Product Properties

		Test Standard	Unit	AWWA C216	Aqua-Shield™ AQW-FF
Adhesive	Softening Point	ASTM E28	°C (°F)	--	**102 (216)**
Backing	Tensile Strength	ASTM D638	psi	2200	**2900**
	Elongation	ASTM D638	%	400	**700**
	Hardness	ASTM D2240	Shore D	--	**52**
	Abrasion Resistance	ASTM D1044	mg	--	**40**
	Volume Resistivity	ASTM D257	Ohm-cm	10^{14}	**10^{17}**
	Dielectric Strength	ASTM D149	V/mil	400	**700**
	Water-vapour Transmission	ASTM E 96	g/h/m^2	0.05	**< 0.01**
	Heat Shock	AWWA C216	pass / fail	pass	**pass**
Sleeve	Peel Strength	ASTM D1000	pli	8	**46**
	Low Temperature Flexibility	ASTM D2671	°C (°F)	–	**-14 (7)**
	Impact	ASTM G14	in.-lbs	25	**50**
	Width Deviation		%	± 10	**± 5**

How to Order: Aqua-Shield™ AQW-FF

Dimensions & Ordering Info

AQW-FF-B 450-30 BK

	Aqua-Shield™ AQW-FF - Bulk Rolls
Colour	**BK-** Black
Roll Length	**< 600mm** (24") **wide = 30m** (100ft) **> 600mm** (24") **wide = 15m** (50ft)
Roll Width	**450, 600, 900mm** (18, 24, 36")
Product Designation	**AQW-FF -** AquaWrap FF

AQW-FF 1270-450 BK

	Aqua-Shield™ AQW-FF - Cut-to-Length Sleeves
Colour	**BK-** Black
Sleeve Width	**450, 600, 900mm** (18, 24, 36")
Pipe Size	**All Sizes**
Product Designation	**AQW-FF -** AquaWrap FF
Pipe Size Range	**All**
"as supplied" Adhesive Thickness	**50 mils** (1.25 mm)
"as supplied" Backing Thickness	**25 mils** (0.625 mm)
"fully recovered" Sleeve Thickness	**97 mils** (2.4 mm)

AQW-FF Sleeves

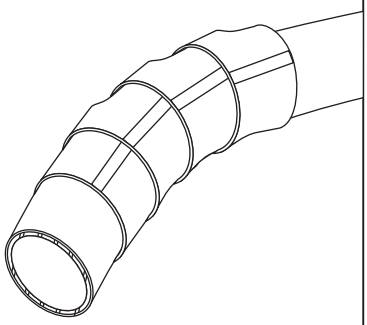

The above represents standard ordering options. Consult your Canusa representative for any unique project requirements.

Product Sizing

Product Sizing

Min. Sleeve Width = Bare Steel Dimension + 50mm (2") on each side of the pipe section with a minimum 75mm (3") sleeve overlap.

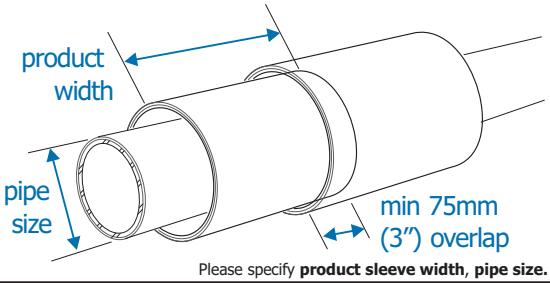

Please specify **product sleeve width, pipe size.**

Other Aqua-Shield™ Products

Other Aqua-Shield™ Products

AQW-HS Sleeves

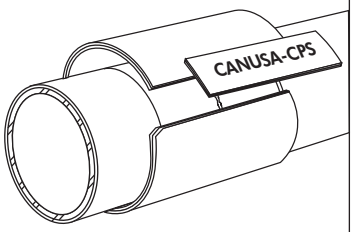

For standard girth-welds

AQS-FPK Sleeves

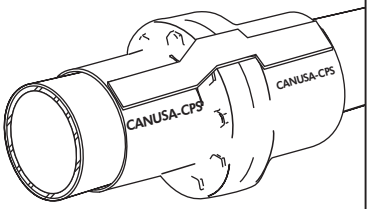

For flange joints

CANUSA-CPS
A SHAWCOR COMPANY

www.canusacps.com

Canada
CANUSA-CPS
a division of SHAWCOR LTD.
25 Bethridge Road
Rexdale, Ontario
M9W 1M7,
Canada
Tel: +1 (416) 743-7111
Fax: +1 (416) 743-5927

U.S.A./Latin America
CANUSA-CPS
a division of SHAWCOR INC.
2408 Timberloch Place
Building C-8
The Woodlands, Texas
77380, U.S.A.
Tel: +1 (281) 367-8866
Fax: +1 (281) 367-4304

Europe/Middle East
CANUSA-CPS
a division of Canusa Systems Ltd.
Unit 3, Sterling Park
Gatwick Road
Crawley, West Sussex
England RH10 9QT
Tel: +44 (1293) 541254
Fax: +44 (1293) 541777

Asia/Pacific
CANUSA-CPS
a division of SHAWCOR LTD.
#05-31, Blk 52, Frontier
Ubi Avenue 3
Singapore
408867
Tel: +65-6749-8918
Fax: +65-6749-8919

Canusa warrants that the product conforms to its chemical and physical description and is appropriate for the use stated on the installation guide when used in compliance with Canusa's written instructions. Since many installation factors are beyond our control, the user shall determine the suitability of the products for the intended use and assume all risks and liabilities in connection therewith. Canusa's liability is stated in the standard terms and conditions of sale. Canusa makes no other warranty either expressed or implied. All information contained in this installation guide is to be used as a guide and is subject to change without notice. This installation guide supersedes all previous installation guides on this product. E&OE

Printed on recycled paper. Recyclable. PDS-AQWFF-rev013